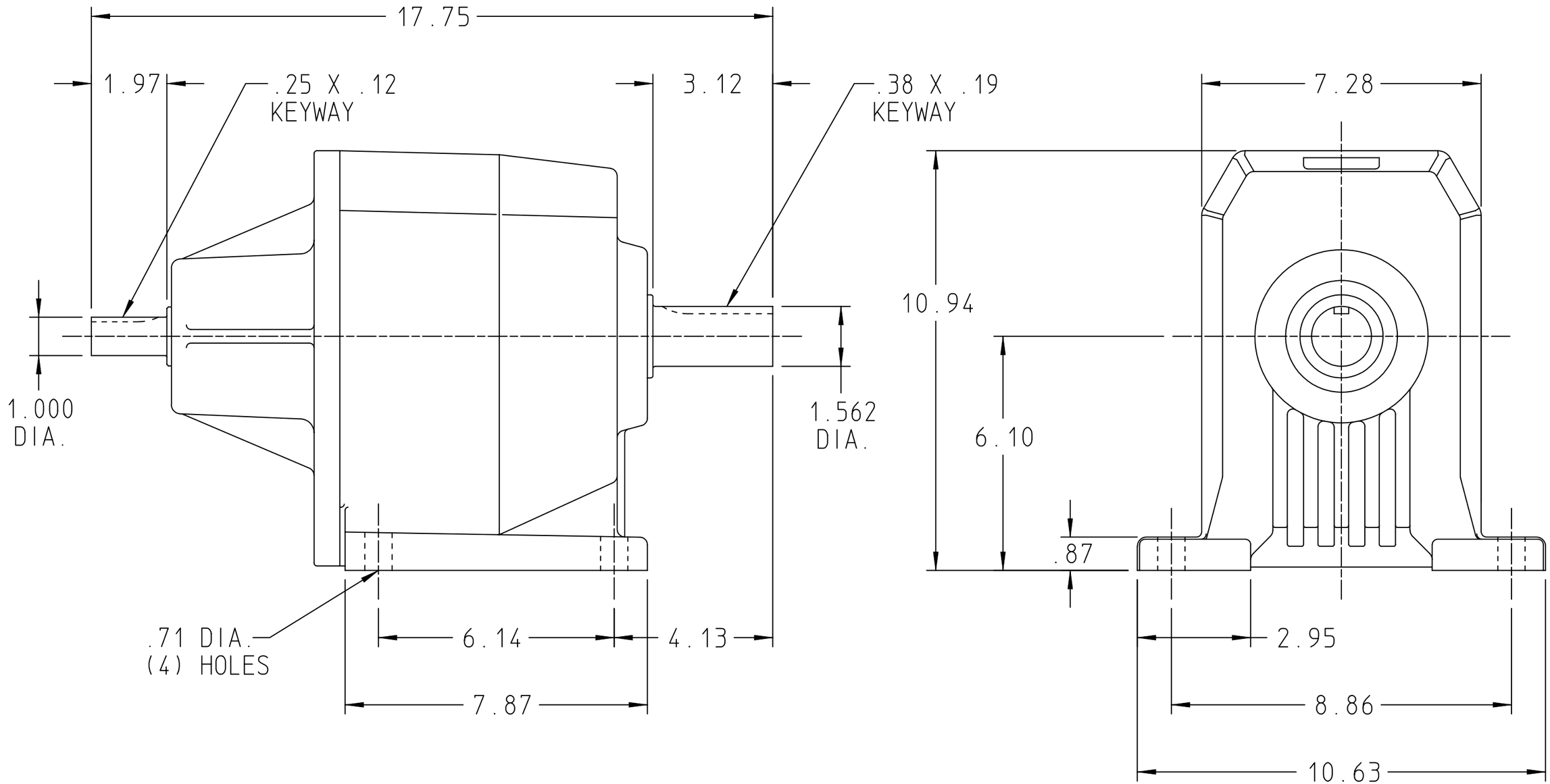

REV		DATE
A		23 DEC 04

THIRD ANGLE PROJECTION

THIS DRAWING IS THE PROPERTY OF VIKING PUMP, INC. AND IS PROPRIETARY IN GENERAL AND DETAIL. IT SHALL NOT BE COPIED OR ITS CONTENTS REVEALED TO OUTSIDE PARTIES WITHOUT WRITTEN CONSENT OF VIKING PUMP, INC.

VIKING INLINE REDUCER, SIZE 51 SOLID SHAFT

USE & RELATED INFORMATION

GEOMETRIC SYMBOLS

RUNOUT	↗	PARALLELISM	//
FLATNESS	▱	PERPENDICULARITY	⊥
ROUNDNESS	○		

------ UNLESS OTHERWISE SPECIFIED ------

TWO PLACE DECIMALS .XX = +-.02
THREE PLACE DECIMALS .XXX = +-.005
ANGLES = +-5°
ALL FINISHED SURFACES 250√(AA .030 CUTOFF)
BREAK EDGES .005 / .015 RADIUS OR CHAMFER

DRAWN	KROGMANN	23 DEC 04
	DRS	05 JAN 05
APPROVED		
SCALE	3=8	INCH DIM.

VIKING PUMP

VIKING PUMP, INC.
A Unit of IDEX Corporation
Cedar Falls, Iowa 50613
U.S.A.

PATTERN NUMBER

DRG. B

DRAWING 3-551-510